ENGINEERING DATA

SCREW AIR COMPRESSOR

[MODEL:CAS100V]

460V/60Hz

REV.NO	DATE	WRITTEN BY	APPR.BY
0	21-Feb-19	H.D.HWANG	M.S. JU

COAIRE
Since 1968

CAS100V 460[V] 60[Hz] Engineering Data

Model		CAS100V04	CAS100V24	CAS100V54
GENERAL OPERATING CONDITION				
Compression Gas	-		Air	
Suction Pressure	atm		-	
Location	-		Indoor	
Ambient Temperature	˚F		Max.104	
Humidity	%		Below 85	
GENERAL COMPRESSOR DATA				
Air Delivery[FAD]	CFM	175.2~437.9	173.8~434.4	152.6~381.4
Maximum Operating Pressure	Psi	100	125	150
Minimum Operating Pressure	Psi		65	
Maximum Operating Temperature	˚F		104	
Minimum Operating Temperature	˚F		23	
AIREND DATA				
Model	-	Z100	Z100	Z100S
Type	-		Oil Injected, Single Stage	
Compression Method	-		Rotary Positive Displace	
Profile	-		KMC-α	
Lobe Combition	-		4+6	
Male Rotor Diameter	mm		168	
Male Rotor Speed	rpm		3575	
Capacity Control Method	-		Load-Unload Contorl by PT	
Cooling Method	-		Oil Cooled	
Air Cleaning System	-		10micron/99.9% Dry Paper	
Oil Filtering System	-		10 micron/99.9% Spin-on Cartridge	
Step up Method	-		Direct Coupled	
ELECTRICAL DATA				
Nominal Power - Main Drive	HP		100	
- Fan Motor	HP		3	
Maximum Applied Power	HP		118.0	
Main Motor Enclosure	-		IP55	
Nominal Current - Main Motor	Amps		109.5	
Package Current @Full Load	Amps		115.5	
Main Motor Service Factor	-		1.15	
Main Motor Speed	rpm		3575	
Main Motor Frame	-		405TSC	
Main Motor Efficiency	%		94.5	
Main Motor Power Factor	%		91	
Fan Motor Efficiency	%		84.2	
Fan Motor Power Factor	%		74.5	
Main Supply Cable	AWG		1	
Suggested Fuse Rating	Amps		175	

CAS100V 460[V] 60[Hz] Engineering Data

Model		CAS100V04	CAS100V24	CAS100V54
INVERTER DATA				
Maker	–		DANFOSS	
Model	–		FC-102P90KT4	
DC Reactor	–		BUILT IN DRIVE	
COOLING DATA				
Ambient Temperature	°F		104	
Max. Airend Discharge Temperatu	°F		230	
Airend Injection Temperature	°F		149	
Heat Removal-Oil Cooler	kW		67.4	
Heat Removal-After Cooler	kW		11.1	
Oil Flow	GPM		40.6	
Cooling Air Flow	CFM		6780.7	
Cooling Air CTD	°F		77	
Serviec Air Temperature	°F		Max. Amb.+59	
SOUND LEVEL				
Without Ventilation Duct	dB(A)		75	
With Ventilation Duct	dB(A)		73	
CONSTRUCTION FOUNDATION AND INSTALL DATA				
Air Delivery Pipe	A[B]		50[2]	
Coolant Drain[Ball Valve]	A[B]		25[1]	
Power Inlet[Diameter]	Inch(mm)		3.5(90)	
COOLANT LUBRICATION DATA				
Coolant Sump Capacity	Gal		11.6	
Total Coolant Fill Capacity	Gal		14	
DIMENSIONS				
Overall Length	Inch(mm)		78.7(2000)	
Overall Width	Inch(mm)		47.6(1210)	
Overall Height	Inch(mm)		73.11(1857)	
SHIPPING DATA				
Dry Weight	LBS(kg)		4211(1910)	

Note

1. FAD[Free Air Delivery] is full package performance including all losses.
   [Tested in accordance with ISO1217:1996 Annex C.]
2. Sound level is measured in free field conditions in accordance with PNEUROP/CAGI test codes.
3. Controller : Standard Full Micom for VSD
4. Motor Starter : Soft-start by Inverter
5. Measured at nominal motor power.
6. CTD : Coolant Temperature Differential

CAS100S 460[V] 60[Hz] Outside Demension Drawing

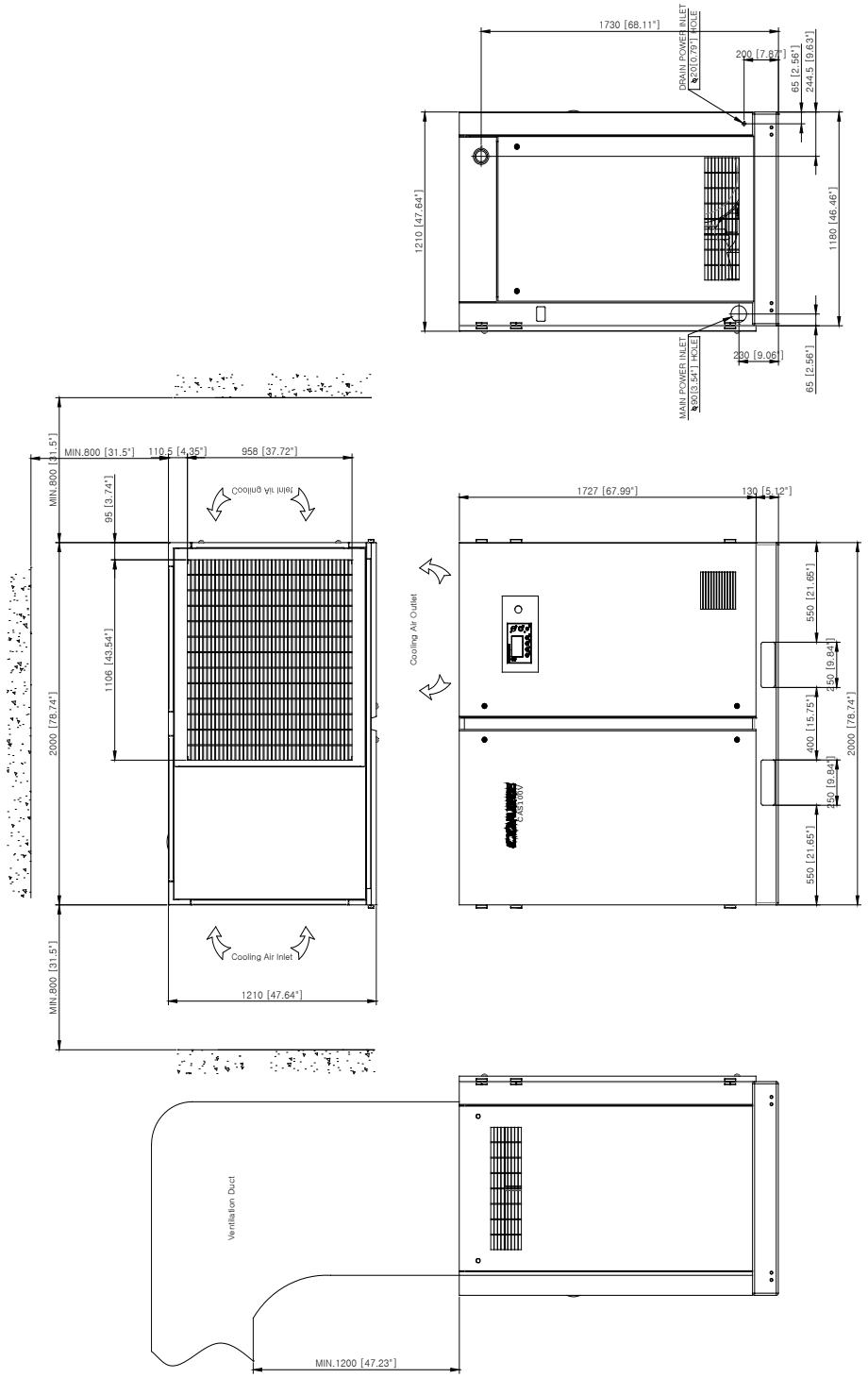

CAS100V 460[V] 60[Hz] Electric Drawing [Power and Motor]

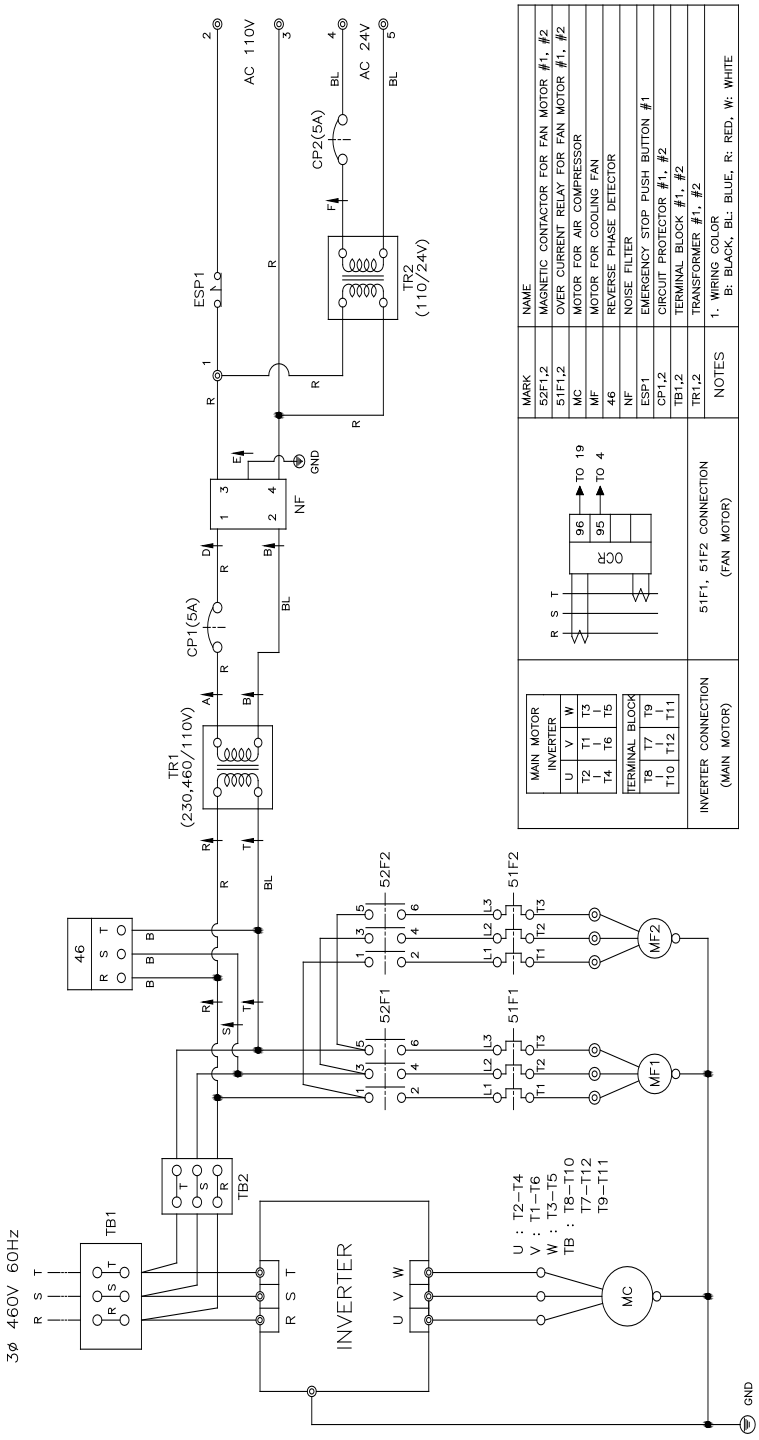
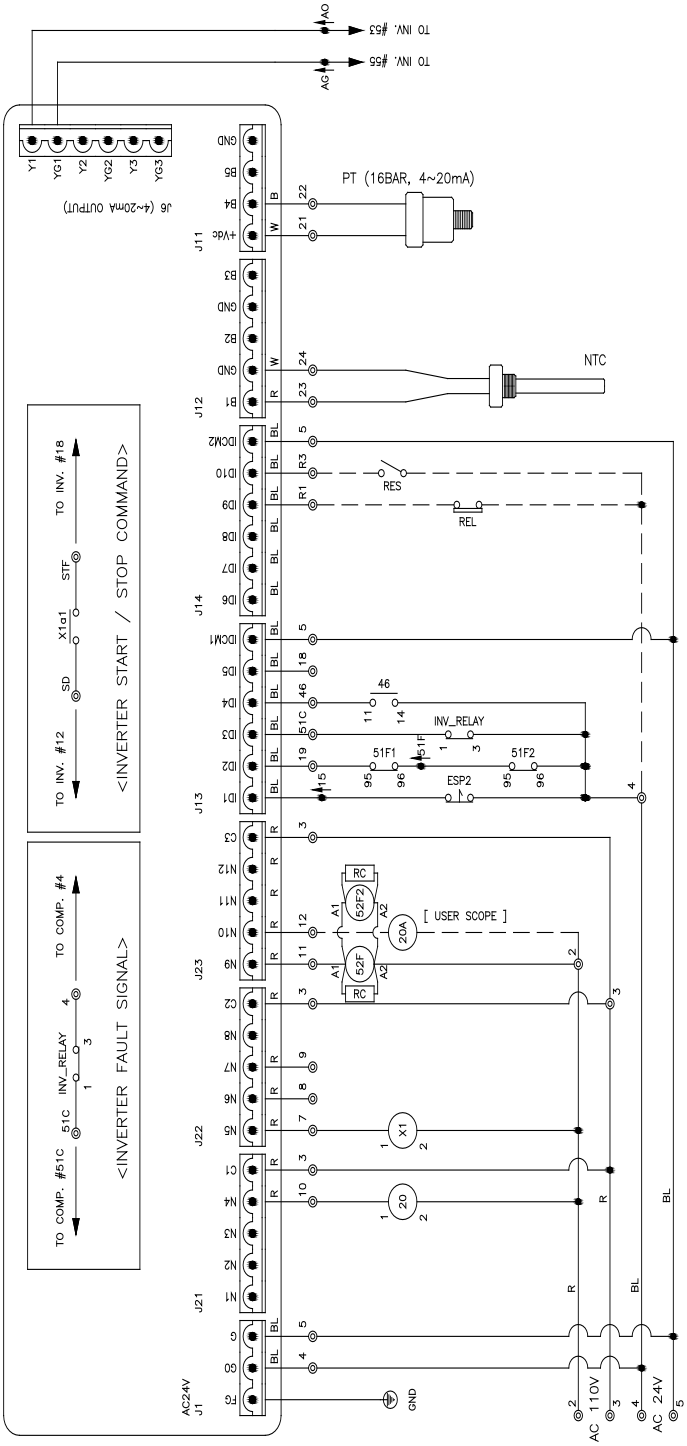
CAS100V 460[V] 60[Hz] Electric Drawing [Control Parts]