ENGINEERING DATA

OILFREE SCROLL COMPRESSOR

CSOF-S8PL(H) **60Hz, 460V**

REV.NO	DATE	WRITTEN BY	APPR. BY
0	19-Apr-12	S.J. PARK	S.K. PARK

COAIRE

Scroll compressor Engineering Data CSOF-S8PL(H) 60Hz, 460V

Model		CSOF-S8PL	CSOF-S8PH
GENERAL OPERATING CONDITION			
Compression Gas	-	Air	
Suction Pressure	psi	14.7	
Location	-	Indoor	
Ambient Temperature	°F	Max. 104	
Humidity	%	Below 85	
GENERAL COMPRESSOR DATA			
Air Delivery[FAD]	CFM	22.6	19.2
Maximum Operating Pressure	psig	115	140
Maximum Operating Temperature	°F	104	
Minimum Operating Temperature	°F	32	
Dischage Air Temperature	°F	Amb.Temp.+ 45	
SCROLL AIREND DATA			
Model	-	BC-KL52L	BC-KL52H
Type	-	Oilfree, Single Stage	
Compression Method	-	Involute Positive Displace	
Orbit Scroll Speed	rpm	3150	2900
Capacity Control Method	-	ON-OFF By PT.	
Cooling Method	-	Air Cooled By Sirocco Fan	
Air Cleaning System	-	10micron/99.9% Dry Paper	
Step up Method	-	V-Belt	
ELECTRICAL DATA			
Nominal Power - Main Drive	HP	8 (5+3)	
- Fan Motor	HP	0.088	
Maximum Applied Power	BHP	9.2	
Main Motor Enclosure	-	IP54	
Nominal Current - Main Motor	Amps	(6.9+4)	
Package Current @Full Load	Amps	12	
Main Motor Service Factor	-	1.15	
Main Motor Speed	rpm	(1750+1725)	
Main Motor Frame	-	(184T+182T)	
Main Motor Efficiency	%	89.5	
Main Motor Power Factor	%	(80+74)	
Fan Motor Efficiency	%	71	
Fan Motor Power Factor	%	71	
Main Supply Cable	square	15	
Suggested Fuse Rating	Amps	20	

Scroll compressor Engineering Data CSOF-S8PL(H) 60Hz, 460V

Model		CSOF-S8PL	CSOF-S8PH
COOLING DATA			
Ambient Temperature	°F	104	
Max. Airend Discharge Temperature	°F	365	392
Heat Removal-Airend	kW	0.86	0.71
Heat Removal-After Cooler	kW	1.09	0.99
Cooling Air Flow	CFM	1977.6	1977.6
Max.Exhaust Cooling Air Temp.	°F	158	158
SOUND LEVEL			
Without Ventilation Duct	dB(A)	52±5	
With Ventilation Duct	dB(A)	50±5	
CONSTRUCTION FOUNDATION AND INSTALL DATA			
Air Delivery Pipe	Inch	PT 1"	
Drain Water Outlet[Ball Valve]	Inch	PT 1/4"	
Power Inlet[Diameter]	Inch	1.2"	
DIMENSIONS			
Overall Length	Inch	25.6"	
Overall Width	Inch	45.7"	
Overall Height	Inch	51.2"	
SHIPPING DATA			
Dry Weight	Lbs	536	

Note

1. FAD[Free Air Delivery] is full package performance including all losses.
   [Tested in accordance with ISO1217:1996 Annex C.]
2. Sound level is measured in free field conditions in accordance with PNEUROP/CAGI test codes,
   with ±5dB(A) tolerance
3. Controller : Standard Full Micom
4. Motor Starter : D.O.L (Direct On Line)
5. Relative Humidity : 40%
6. Measured at nominal motor power.

Outside Drawing

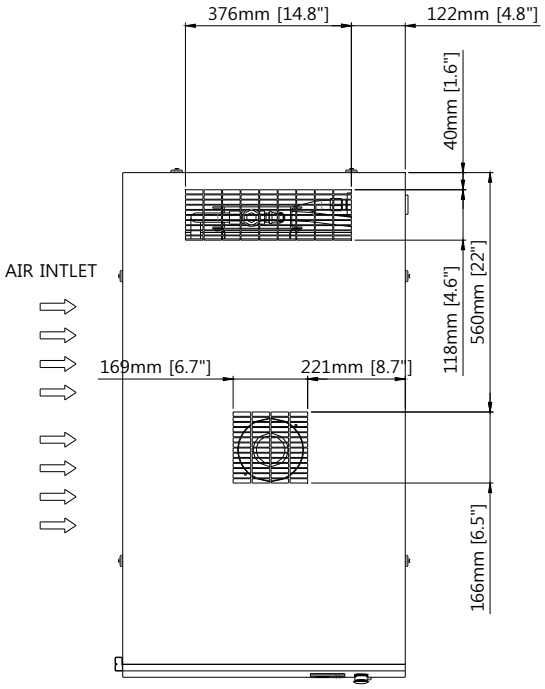

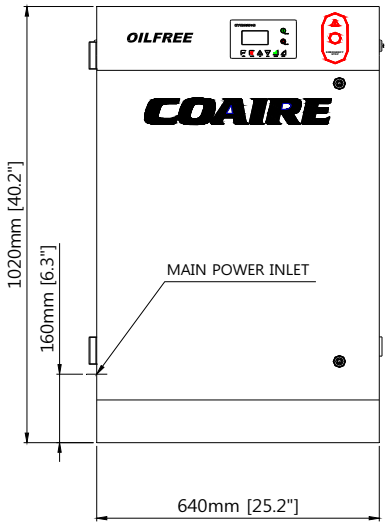

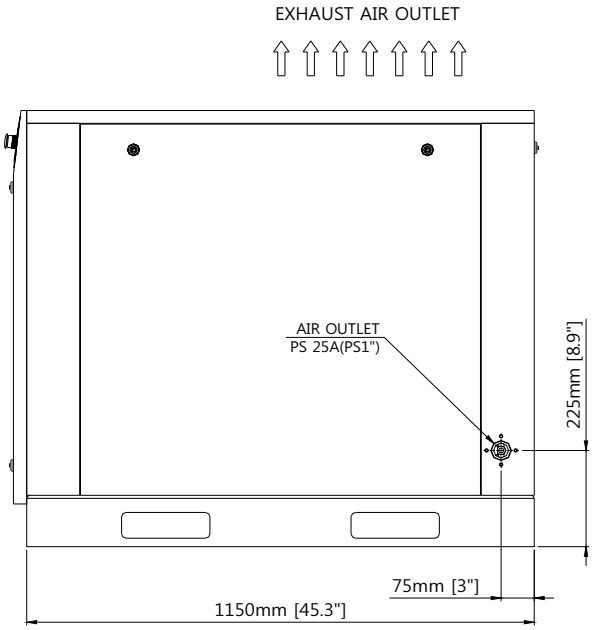

Electrical Drawing

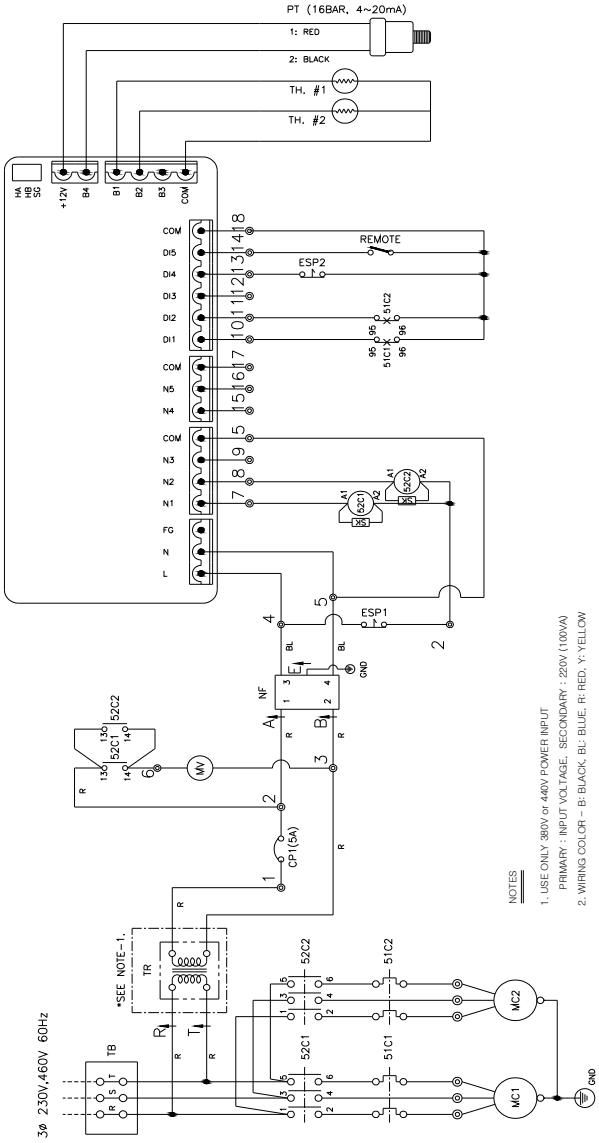

SYMBOL INDEX

No.	SYMBOL	DESCRIPTION	No.	SYMBOL	DESCRIPTION
1	51C	OVER CURRENT RELAY FOR COMPERSSOR MOTOR	9	PT	PRESSURE TRANSMITTER
2	52C	MAGNETIC CONTACTOR FOR COMPRESSOR MOTOR	10	SK	SURGE KILLER
3	ESP	EMERGENCY STOP PUSH BUTTON SWITCH	11	TB	TERMINAL BLOCK FOR INPUT POWER SOUCE
4	F	FUSE	12	TH	THERMISTOR
5	GND	GROUND CONNECTION	13	TR	TRANSFORMER
6	MC	MOTOR FOR AIR COMPRESSOR	14	◎	TERMINAL BLOCK NUMBER FOR CONTROL WIRE
7	MV	MOTOR FOR VENT FAN	15	TEXT	WIRING NUMBER
8	NF	NOISE FILTER			