ENGINEERING DATA

OILFREE SCROLL COMPRESSOR

CSOF-D5PL(H) **60Hz, 460V**

REV.NO	DATE	WRITTEN BY	APPR. BY
0	19-Apr-12	S.J. PARK	S.K. PARK

COAIRE

Scroll compressor Engineering Data CSOF-D5PL(H) 60Hz, 460V

Model		CSOF-D5PL	CSOF-D5PH
GENERAL OPERATING CONDITION			
Compression Gas	-	Air	
Suction Pressure	psi	14.7	
Location	-	Indoor	
Ambient Temperature	°F	Max. 104	
Humidity	%	Below 85	
GENERAL COMPRESSOR DATA			
Air Delivery[FAD]	CFM	14.1	12
Maximum Operating Pressure	psig	115	140
Maximum Operating Temperature	°F	104	
Minimum Operating Temperature	°F	32	
Dischage Air Temperature	°F	Amb. Temp.+ 5.4	
SCROLL AIREND DATA			
Model	-	BC-KL52L	BC-KL52H
Type	-	Oilfree, Single Stage	
Compression Method	-	Involute Positive Displace	
Orbit Scroll Speed	rpm	3150	2900
Capacity Control Method	-	ON-OFF By PT.	
Cooling Method	-	Air Cooled By Sirocco Fan	
Air Cleaning System	-	10micron/99.9% Dry Paper	
Step up Method	-	V-Belt	
ELECTRICAL DATA			
Nominal Power - Main Drive	HP	5	
- Fan Motor	HP	0.04	
Maximum Applied Power	BHP	5.04	
Main Motor Enclosure	-	IP54	
Nominal Current - Main Motor	Amps	6.6	
Package Current @Full Load	Amps	7.6	
Main Motor Service Factor	-	1.15	
Main Motor Speed	rpm	1750	
Main Motor Frame	-	184T	
Main Motor Efficiency	%	89.5	
Main Motor Power Factor	%	80	
Fan Motor Efficiency	%	71	
Fan Motor Power Factor	%	71	
Main Supply Cable	square	15	
Suggested Fuse Rating	Amps	15	

Scroll compressor Engineering Data CSOF-D5PL(H) 60Hz, 460V

Model		CSOF-D5PL	CSOF-D5PH
COOLING DATA			
Ambient Temperature	°F	104	
Max. Airend Discharge Temperature	°F	365	392
Heat Removal-Airend	kW	0.52	0.44
Heat Removal-After Cooler	kW	0.66	0.61
Cooling Air Flow	CFM	1178.8	1178.8
Max.Exhaust Cooling Air Temp.	°F	158	158
SOUND LEVEL			
Without Ventilation Duct	dB(A)	50±5	
With Ventilation Duct	dB(A)	48±5	
CONSTRUCTION FOUNDATION AND INSTALL DATA			
Air Delivery Pipe	Inch	PT 1/2"	
Drain Water Outlet[Ball Valve]	Inch	PT 1/4"	
Power Inlet[Diameter]	Inch	1.18"	
DIMENSIONS			
Overall Length	Inch	27.56"	
Overall Width	Inch	24.72"	
Overall Height	Inch	58.5"	
SHIPPING DATA			
Dry Weight	Lbs	430	

Note

1. FAD[Free Air Delivery] is full package performance including all losses.

   [Tested in accordance with ISO1217:1996 Annex C.]

2. Sound level is measured in free field conditions in accordance with PNEUROP/CAGI test codes,

   with +5dB(A) tolerance

3. Controller : Standard Full Micom

4. Motor Starter : D.O.L (Direct On Line)

5. Relative Humidity : 40%

6. Measured at nominal motor power.

Scroll compressor Engineering Data CSOF-D5PL(H) 60Hz, 460V

Model		CSOF-D5PL	CSOF-D5PH
AIR DRYER			
Model	-	PSDL-05	
Type	-	Refrigerated Type	
Rated Capacity	CFM	21.9 @ 100.4°F PDP	
Inlet Air Temp.	°F	104(MAX.140)	
Outlet Dew Point	°F	50	
Max.Working Pressure	psig	140	
Condensor Cooling Type	-	Air Cooled	
Refrigerant	-	R-134a	
Power Consumption	kW	0.4	
AIR TANK			
Volume	gal	10	
Max. Operating Pressure	psig	140	
AIR FILTER			
Model		KWF15A-320	
Type		PARTICULATE FILTER(5㎛)	
Max. Operating Flow Rate	CFM	63.5	

Outside Drawing

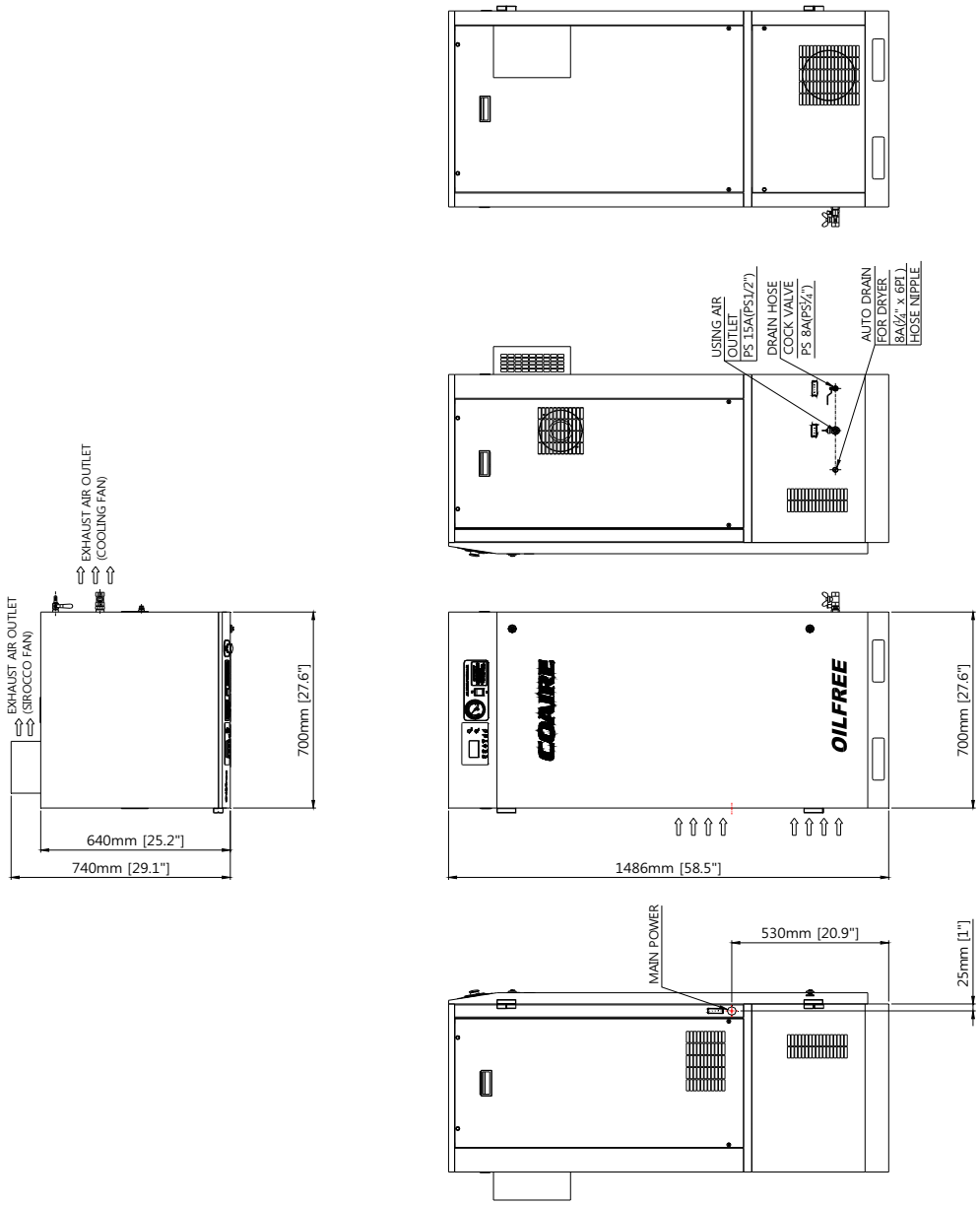
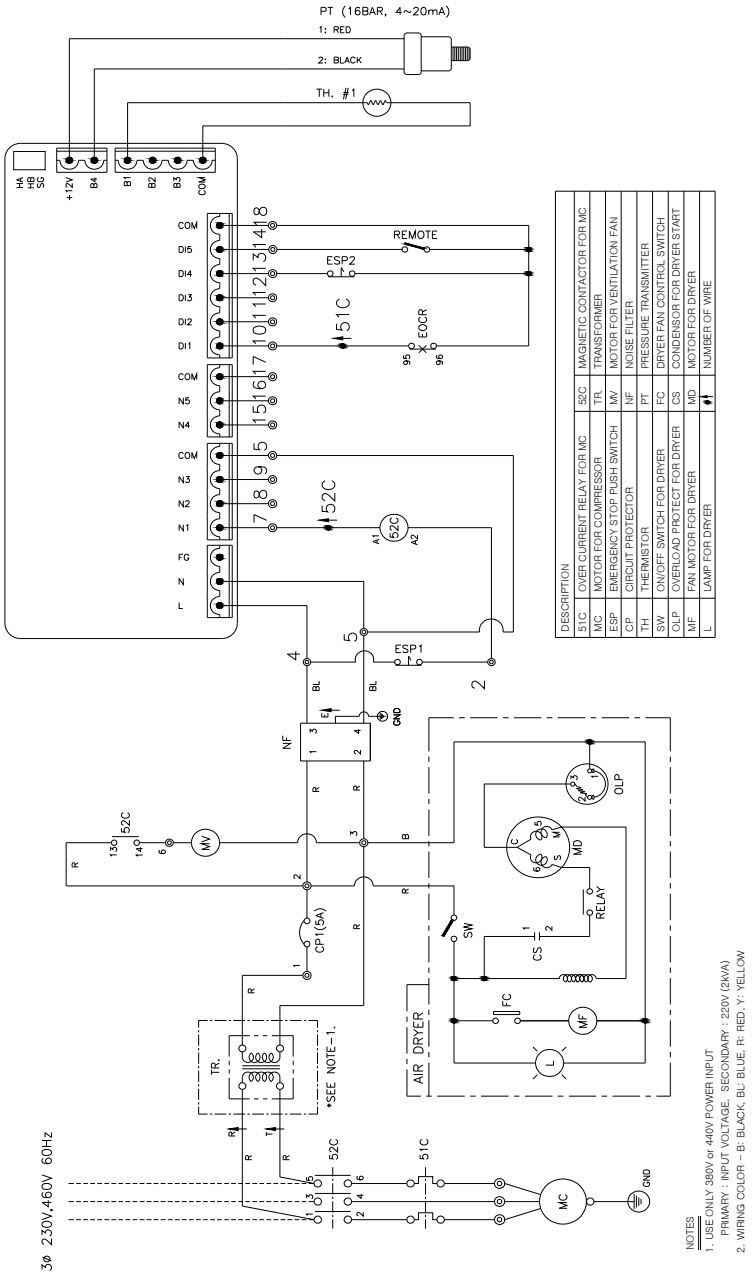
Electrical Drawing